INNOWAVE RF

Innovation in Every Wave

112B-600-2700

2-Way In-Line Reactive Power Splitters

-163dBc PIM, 600-2700 MHz, IP67

112B-600-2700 is a Low-PIM 2-Way In-Line Reactive Power Splitter, designed to evenly split high power signals between 600MHz and 2700MHz. This unique In-Line structure is Compact and can be used without any bulky inter-connections or undue cable stress. These splitters are rated to be used in extreme weather and environmental conditions. It also has a very low Insertion Loss with an outstanding VSWR at all three ports. Available with different connector options.

FEATURES:

- Wide bandwidth 600 MHz – 2700 MHz
- In-Line Reactive Splitter
- Low Insertion Loss and low VSWR
- Low PIM, -163dBc
- *RoHS* Complaint
- Weatherproof / Outdoor unit
- In Stock to low lead time delivery
- Superior Construction and High Power Handling

SPECIFICATIONS:

Frequency Range:	600 MHz – 2700 MHz
Passband Insertion Loss:	0.25 dB (Over the theoretical loss of 3 dB)
VSWR:	≤ 1.25 @ 600-960 MHz ≤ 1.22 @ 960-2700 MHz
Power Handling:	300 W (Avg)
Impedance:	50Ω
PIM – 3rd:	-163 dBc (2 Tones +43 dBm)
Temperature Range:	-30°C to 75°C
Weight:	0.75 lb
Housing Finish:	Aluminum Body
Mounting Method:	Mounting Holes
Humidity:	5% - 95%
Environment:	IP67

Block Diagram for 112B-600-2700

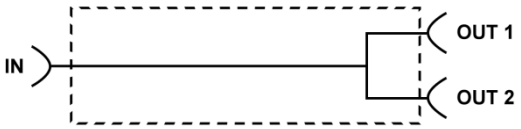

ORDERING INFO:

112B-600-2700-D	--- *7/16 DIN Connector*
112B-600-2700-MD	--- *Mini-DIN Connector*
112B-600-2700-D43	--- *4.3-10 Connector*
112B-600-2700-X10	--- *Nex10 Connector*

Dimensions for 112B-600-2700

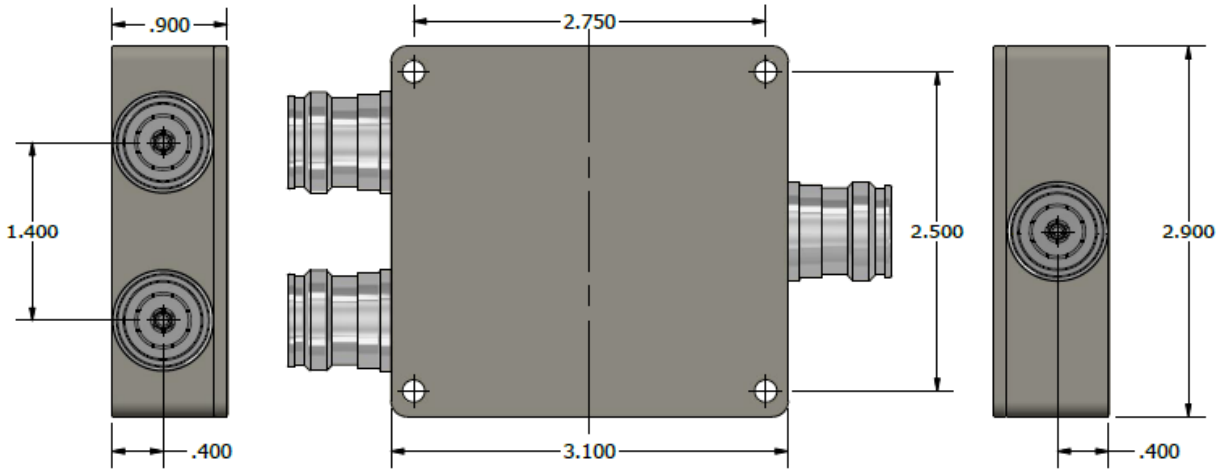

Please contact our sales department at 737-200-7090 or sales@InnowaveRF.com for any custom requirements.

© Innowave RF, LLC. All Rights Reserved. Specs can change without notice. Drawings are for reference purpose only.